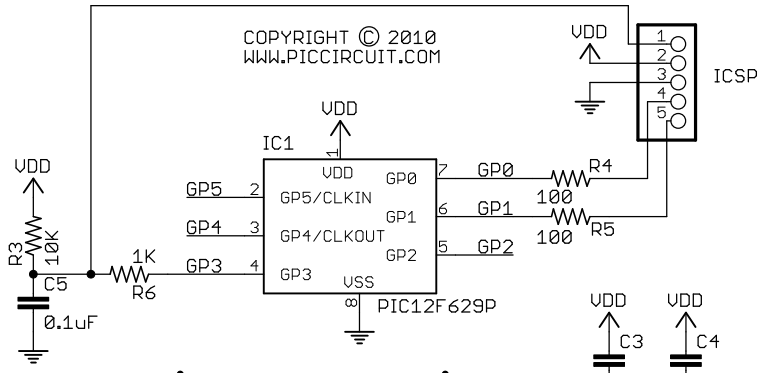
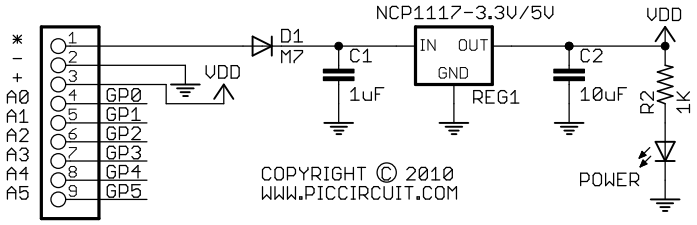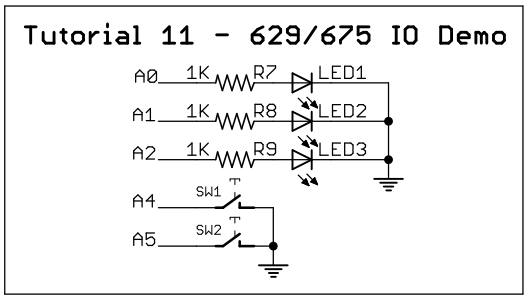
iBoard Tiny
iCP07-V1.0